Product Specifications

Name: 24-key Infrared Controller
Model: LN-CON-IR24B-3CH-LV

Summarization

24-key infrared controller adopts the advanced micro control unit,it is used for controlling a variety of lamp whose source of light is LED. For instance, point source of light,flexible light strip, wall washer lamp, glass curtain wall light and so on; it has many advantages such as low price, easy connection and simplicity to use. Meanwhile,you could adjust brightness, static color choices and various dynamic changes in lighting effects through infrared remote control.

Technical Parameters

- Working temperature：-20-60 ℃
- Supply voltage: DC5V, 12V, 18V, 24V <optional >(for orders specify voltage)
- 0utput: 3 channels
- Connecting mode：common anode
- External dimension：L63XW35XH22 mm
- Packing size：L105XW65XH40 mm
- Net weight: 50 g
- Gross weight: 70 g
- Static power consumption: <1 W
- Output current: <2 A (each channel)
- Output power: 5 V: <30W, 12V: <72W, 24V: <144W

ADD：Room 402-403, Jinhu yayuan, Luozu Road, Shiyan Town, Bao'an District, Shenzhen City, Guangdong,China
TEL：+86-0755-29686890 / 29686239 FAX：+86-0755-29686158 E-mail：sales@leynew.com

External Dimension

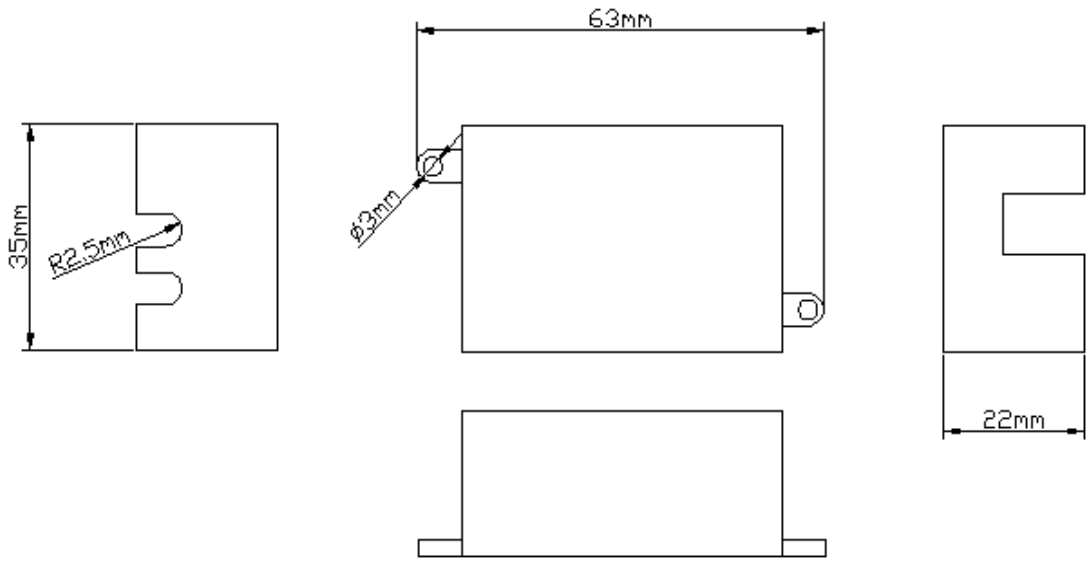

Interface Specifications

Power input interface:

Adopt conventional power Transposon as a DC power input interface.

Infrared receiver interface:

Adopt oblate three-way wire，and connect an infrared receiver to receive an external infrared.

Load output interface:

Adopt oblate interface.

ADD：Room 402-403, Jinhu yayuan, Luozu Road, Shiyan Town, Bao'an District, Shenzhen City, Guangdong,China
TEL：+86-0755-29686890 / 29686239 FAX：+86-0755-29686158 E-mail：sales@leynew.com

Direction for use

1. Connect the load wire at first, following by the power wire; Please ensure short circuit can not occur between connecting wire before you turn on the power；
2. operation,you will receive infrared remote control in front of infrared receiver to ensure that there is no barrier between the remote control and receiving head;
   The key-press functions are shown in the table below (in accordance with the key position order):

Brightness rise(a total of eight grading)	Brightness drop (a total of eight grading)	Close load output	Open load output
Static red	Static green	Static blue	Static white
Static orange	Static light green	Static deep blue	7-color jumpy changing
Static deep yellow	Static cyan	Static brown	the overall gradually changing
Static yellow	Static light blue	Static pink	7-color gradually changing
Static light yellow	Static pale blue	Static purple	Red, green, blue colour jumping changing

Typical Applications

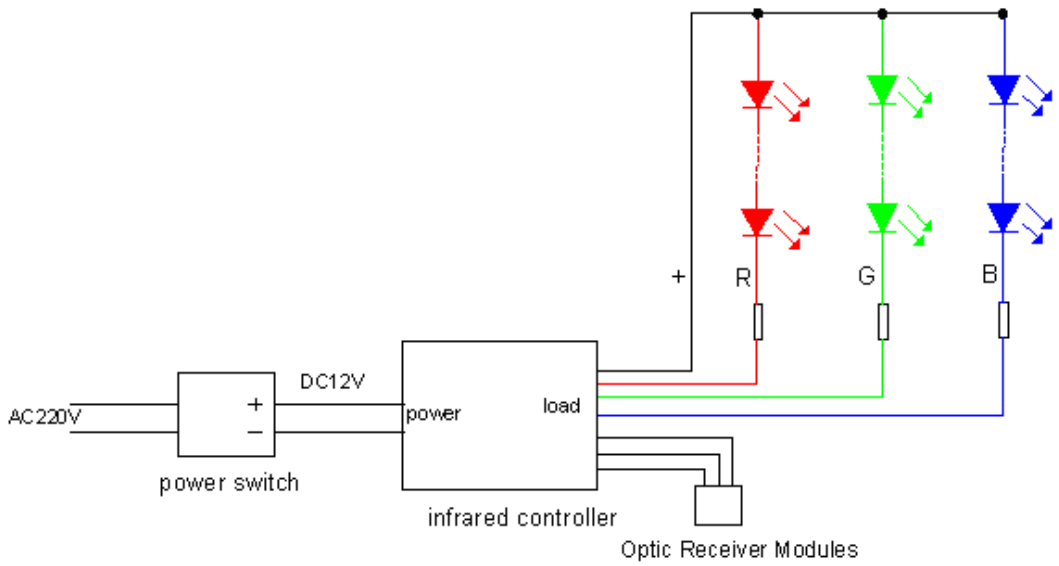

ADD：Room 402-403, Jinhu yayuan, Luozu Road, Shiyan Town, Bao'an District, Shenzhen City, Guangdong,China
TEL：+86-0755-29686890 / 29686239 FAX：+86-0755-29686158 E-mail：sales@leynew.com