电查网（IC5.CN）—百万电子工程师爱用电查网

DATA SHEET

For a complete data sheet, please also download:

- The IC06 74HC/HCT/HCU/HCMOS Logic Family Specifications
- The IC06 74HC/HCT/HCU/HCMOS Logic Package Information
- The IC06 74HC/HCT/HCU/HCMOS Logic Package Outlines

74HC/HCT595

8-bit serial-in/serial or parallel-out shift register with output latches; 3-state

Product specification
Supersedes data of September 1993
File under Integrated Circuits, IC06

1998 Jun 04

Philips Semiconductors

PHILIPS

电查网（IC5.CN）—百万电子工程师爱用电查网

FEATURES

- 8-bit serial input
- 8-bit serial or parallel output
- Storage register with 3-state outputs
- Shift register with direct clear
- 100 MHz (typ) shift out frequency
- Output capability:
  - parallel outputs; bus driver
  - serial output; standard
- I_{CC} category: MSI.

APPLICATIONS

- Serial-to-parallel data conversion
- Remote control holding register.

DESCRIPTION

The 74HC/HCT595 are high-speed Si-gate CMOS devices and are pin compatible with low power Schottky TTL (LSTTL). They are specified in compliance with JEDEC standard no. 7A.

The “595” is an 8-stage serial shift register with a storage register and 3-state outputs. The shift register and storage register have separate clocks.

Data is shifted on the positive-going transitions of the SH_{CP} input. The data in each register is transferred to the storage register on a positive-going transition of the ST_{CP} input. If both clocks are connected together, the shift register will always be one clock pulse ahead of the storage register.

The shift register has a serial input (D_S) and a serial standard output (Q_7’) for cascading. It is also provided with asynchronous reset (active LOW) for all 8 shift register stages. The storage register has 8 parallel 3-state bus driver outputs. Data in the storage register appears at the output whenever the output enable input (OE) is LOW.

QUICK REFERENCE DATA

GND = 0 V; T_{amb} = 25 °C; $t_r = t_f$ = 6 ns.

SYMBOL	PARAMETER	CONDITIONS	TYP.		UNIT
			HC	HCT	
t_{PHL}/t_{PLH}	propagation delay	C_L = 15 pF; V_{CC} = 5 V			
	SH_{CP} to Q_7’		16	21	ns
	ST_{CP} to Q_n		17	20	ns
	$\overline{MR}$ to Q_7’		14	19	ns
f_{max}	maximum clock frequency SH_{CP}, ST_{CP}		100	57	MHz
C_I	input capacitance		3.5	3.5	pF
C_{PD}	power dissipation capacitance per package	notes 1 and 2	115	130	pF

Notes

1. C_{PD} is used to determine the dynamic power dissipation (P_D in μW):

   $P_D = C_{PD} \times V_{CC}^2 \times f_i + \Sigma (C_L \times V_{CC}^2 \times f_o)$ where:

   f_i = input frequency in MHz

   f_o = output frequency in MHz

   $\Sigma(C_L \times V_{CC}^2 \times f_o)$ = sum of outputs

   C_L = output load capacitance in pF

   V_{CC} = supply voltage in V

2. For HC the condition is V_I = GND to V_{CC}; for HCT the condition is V_I = GND to V_{CC} – 1.5 V.

电查网（IC5.CN）—百万电子工程师爱用电查网

ORDERING INFORMATION

TYPE NUMBER	PACKAGE		
	NAME	DESCRIPTION	VERSION
74HC595N	DIP16	plastic dual in-line package; 16 leads (300 mil); long body	SOT38-1
74HC595D	SO16	plastic small outline package; 16 leads; body width 3.9 mm	SOT109-1
74HC595DB	SSOP16	plastic shrink small outline package; 16 leads; body width 5.3 mm	SOT338-1
74HC595PW	TSSOP16	plastic thin shrink small outline package; 16 leads; body width 4.4 mm	SOT403-1
74HCT595N	DIP16	plastic dual in-line package; 16 leads (300 mil); long body	SOT38-1
74HCT595D	SO16	plastic small outline package; 16 leads; body width 3.9 mm	SOT109-1

PINNING

SYMBOL	PIN	DESCRIPTION
Q_0 to Q_7	15, 1 to 7	parallel data output
GND	8	ground (0 V)
Q_7'	9	serial data output
$\overline{MR}$	10	master reset (active LOW)
SH_{CP}	11	shift register clock input
ST_{CP}	12	storage register clock input
$\overline{OE}$	13	output enable (active LOW)
D_S	14	serial data input
V_{CC}	16	positive supply voltage

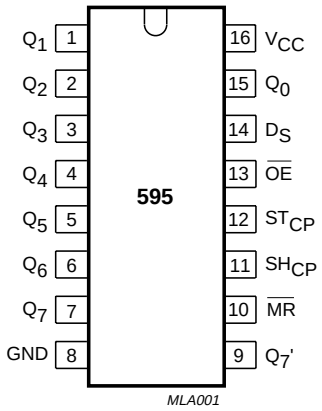

Fig.1 Pin configuration.

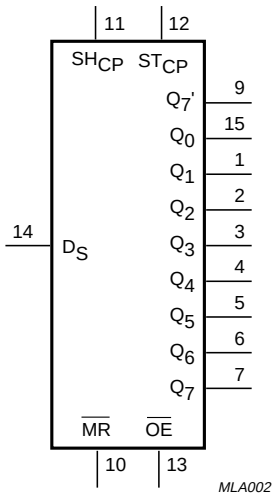

Fig.2 Logic symbol.

电查网（IC5.CN）—百万电子工程师爱用电查网

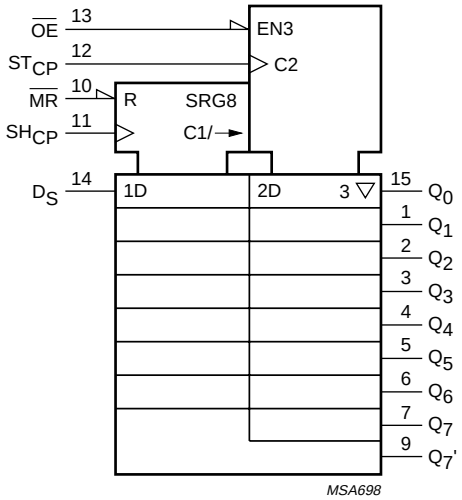

Fig.3 IEC logic symbol.

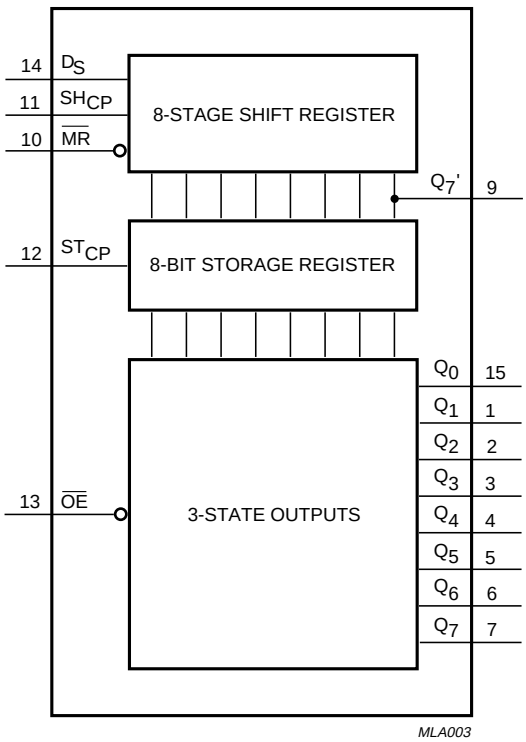

Fig.4 Functional diagram.

电查网（IC5.CN）—百万电子工程师爱用电查网

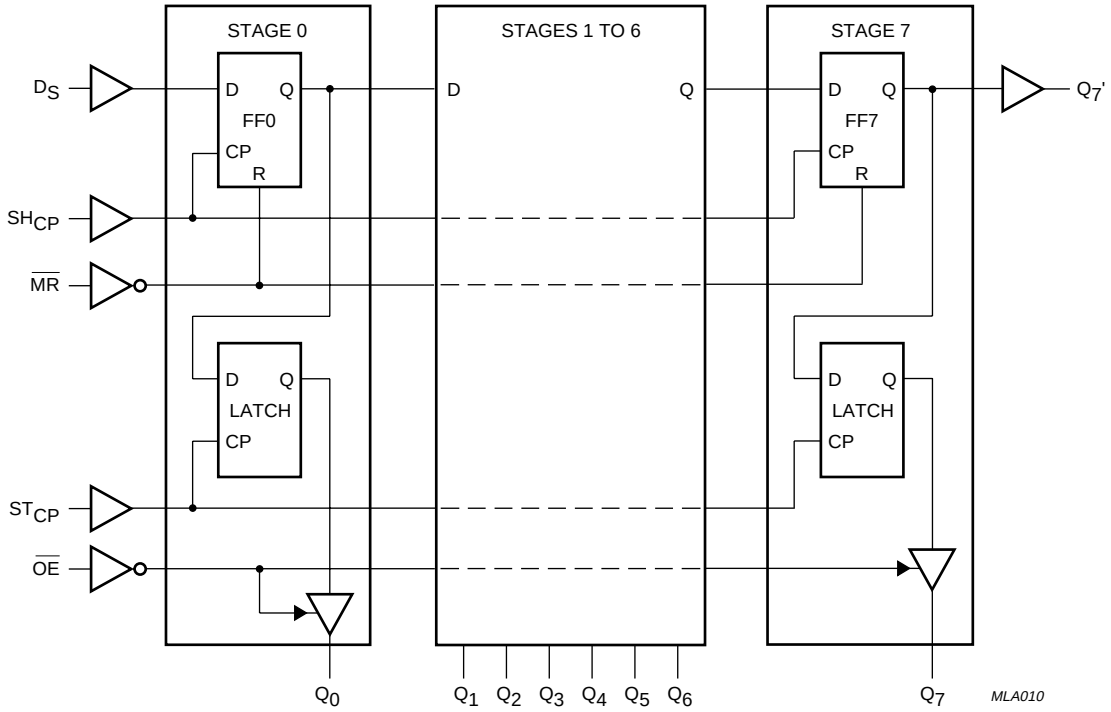

Fig.5 Logic diagram.

电查网（IC5.CN）—百万电子工程师爱用电查网

FUNCTION TABLE

INPUTS					OUTPUTS		FUNCTON
SH_{CP}	ST_{CP}	$\overline{OE}$	$\overline{MR}$	D_S	Q_7'	Q_N	
X	X	L	L	X	L	NC	a LOW level on $\overline{MR}$ only affects the shift registers
X	↑	L	L	X	L	L	empty shift register loaded into storage register
X	X	H	L	X	L	Z	shift register clear. Parallel outputs in high-impedance OFF-state
↑	X	L	H	H	Q_6'	NC	logic high level shifted into shift register stage 0. Contents of all shift register stages shifted through, e.g. previous state of stage 6 (internal Q_6') appears on the serial output (Q_7')
X	↑	L	H	X	NC	Q_n'	contents of shift register stages (internal Q_n') are transferred to the storage register and parallel output stages
↑	↑	L	H	X	Q_6'	Q_n'	contents of shift register shifted through. Previous contents of the shift register is transferred to the storage register and the parallel output stages.

Notes

1. H = HIGH voltage level; L = LOW voltage level
   ↑ = LOW-to-HIGH transition; ↓ = HIGH-to-LOW transition
   Z = high-impedance OFF-state; NC = no change
   X = don't care.

电查网（IC5.CN）—百万电子工程师爱用电查网

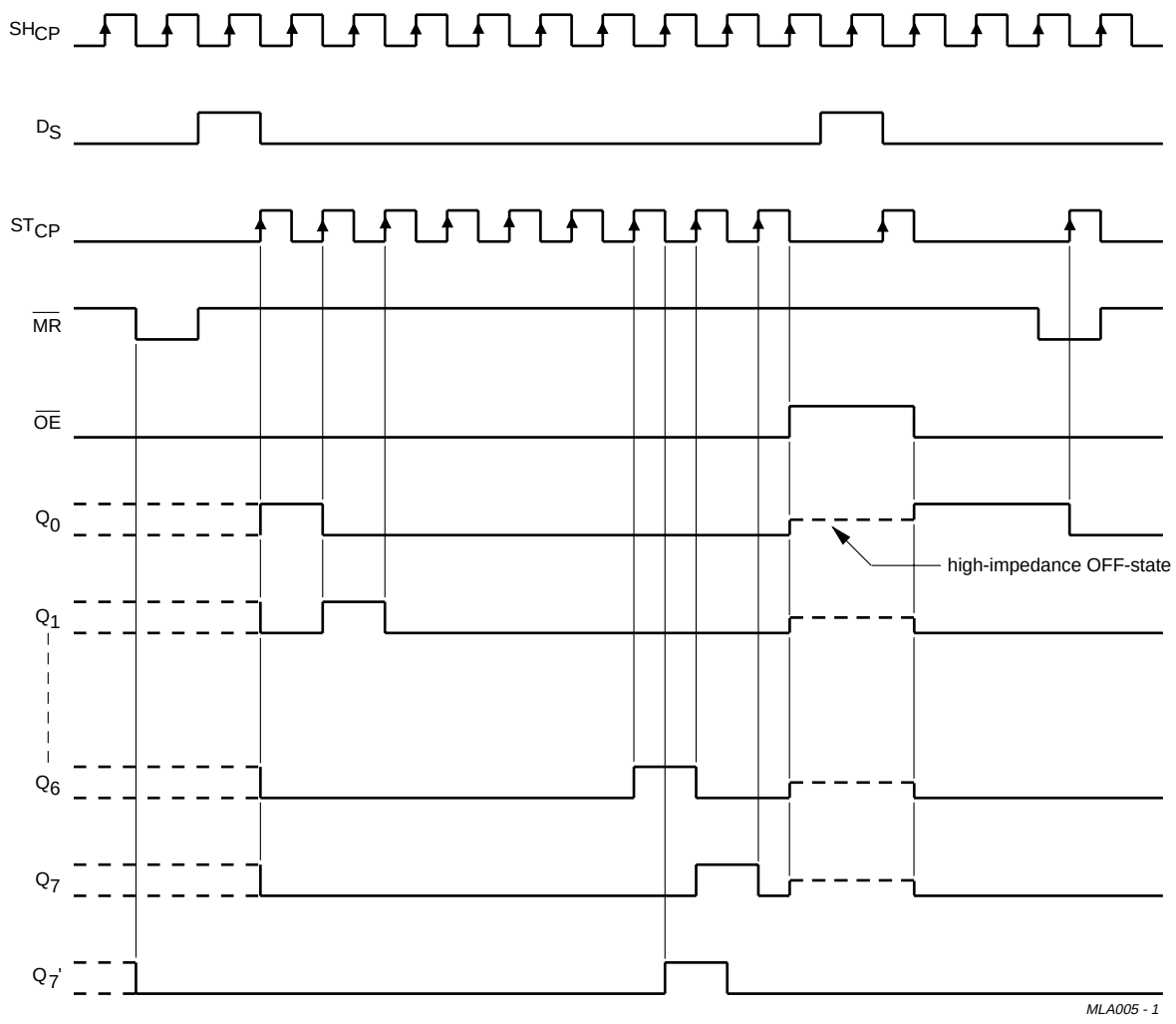

Fig.6 Timing diagram.

电查网（IC5.CN）—百万电子工程师爱用电查网

DC CHARACTERISTICS FOR 74HC

For the DC characteristics see chapter *"74HC/HCT/HCU/HCMOS Logic Family Specifications"*.

Output capability: parallel outputs, bus driver, serial output, standard I_{CC} category: MSI.

AC CHARACTERISTICS FOR 74HC

GND = 0 V; $t_r = t_f = 6$ ns; $C_L = 50$ pF.

SYMBOL	PARAMETER	T_{amb} (°C)							UNIT	TEST CONDITION	
		+25			−40 to +85		−40 to +125			V_{CC} (V)	WAVEFORMS
		min	typ	max	min	max	min	max			
t_{PHL}/t_{PLH}	propagation delay SH_{CP} to Q_7'	–	52	160	–	200	–	240	ns	2.0	Fig.7
		–	19	32	–	40	–	48		4.5	
		–	15	27	–	34	–	41		6.0	
t_{PHL}/t_{PLH}	propagation delay ST_{CP} to Q_n	–	55	175	–	220	–	265	ns	2.0	Fig.8
		–	20	35	–	44	–	53		4.5	
		–	16	30	–	37	–	45		6.0	
t_{PHL}	propagation delay $\overline{MR}$ to Q_7'	–	47	175	–	220	–	265	ns	2.0	Fig.10
		–	17	35	–	44	–	53		4.5	
		–	14	30	–	37	–	45		6.0	
t_{PZH}/t_{PZL}	3-state output enable time $\overline{OE}$ to Q_n	–	47	150	–	190	–	225	ns	2.0	Fig.11
		–	17	30	–	38	–	45		4.5	
		–	14	26	–	33	–	38		6.0	
t_{PHZ}/t_{PLZ}	3-state output disable time $\overline{OE}$ to Q_n	–	41	150	–	190	–	225	ns	2.0	Fig.11
		–	15	30	–	38	–	45		4.5	
		–	12	26	–	33	–	38		6.0	
t_W	shift clock pulse width HIGH or LOW	75	17	–	95	–	110	–	ns	2.0	Fig.7
		15	6	–	19	–	22	–		4.5	
		13	5	–	16	–	19	–		6.0	
t_W	storage clock pulse width HIGH or LOW	75	11	–	95	–	110	–	ns	2.0	Fig.8
		15	4	–	19	–	22	–		4.5	
		13	3	–	16	–	19	–		6.0	
t_W	master reset pulse width LOW	75	17	–	95	–	110	–	ns	2.0	Fig.10
		15	6.0	–	19	–	22	–		4.5	
		13	5.0	–	16	–	19	–		6.0	
t_{su}	set-up time D_S to SH_{CP}	50	11	–	65	–	75	–	ns	2.0	Fig.9
		10	4.0	–	13	–	15	–		4.5	
		9.0	3.0	–	11	–	13	–		6.0	
t_{su}	set-up time SH_{CP} to ST_{CP}	75	22	–	95	–	110	–	ns	2.0	Fig.8
		15	8	–	19	–	22	–		4.5	
		13	7	–	16	–	19	–		6.0	

电查网（IC5.CN）—百万电子工程师爱用电查网

SYMBOL	PARAMETER	T_{amb} (°C)							UNIT	TEST CONDITION	
		+25			−40 to +85		−40 to +125			V_{CC} (V)	WAVEFORMS
		min	typ	max	min	max	min	max			
t_h	hold time D_S to SH_{CP}	3	−6	–	3	–	3	–	ns	2.0	Fig.9
		3	−2	–	3	–	3	–		4.5	
		3	−2	–	3	–	3	–		6.0	
t_{rem}	removal time $\overline{MR}$ to SH_{CP}	50	−19	–	65	–	75	–	ns	2.0	Fig.10
		10	−7	–	13	–	15	–		4.5	
		9	−6	–	11	–	13	–		6.0	
f_{max}	maximum clock pulse frequency SH_{CP} or ST_{CP}	9	30	–	4.8	–	4	–	MHz	2.0	Figs 7 and 8
		30	91	–	24	–	20	–		4.5	
		35	108	–	28	–	24	–		6.0	

电查网（IC5.CN）—百万电子工程师爱用电查网

DC CHARACTERISTICS FOR 74HCT

For the DC characteristics see chapter *"74HC/HCT/HCU/HCMOS Logic Family Specifications"*.

Output capability: parallel outputs, bus driver; serial output, standard I_{CC} category: MSI.

Note to HCT types

The value of additional quiescent supply current (ΔI_{CC}) for a unit load of 1 is given in the family specifications.
To determine ΔI_{CC} per input, multiply this value by the unit load coefficient shown in the table below.

GND = 0 V; $t_r = t_f = 6$ ns; $C_L = 50$ pF.

INPUT	UNIT LOAD COEFFICIENT
D_S	0.25
$\overline{MR}$	1.50
SH_{CP}	1.50
ST_{CP}	1.50
$\overline{OE}$	1.50

电查网（IC5.CN）—百万电子工程师爱用电查网

AC CHARACTERISTICS FOR 74HCT

GND = 0 V; $t_r = t_f = 6$ ns; $C_L = 50$ pF.

SYMBOL	PARAMETER	T_{amb} (°C)							UNIT	TEST CONDITION	
		+25			−40 to +85		−40 to +125			V_{CC} (V)	WAVEFORMS
		min	typ	max	min	max	min	max			
t_{PHL}/ t_{PLH}	propagation delay SH_{CP} to Q_7'	–	25	42	–	53	–	63	ns	4.5	Fig.7
t_{PHL}/ t_{PLH}	propagation delay ST_{CP} to Q_n	–	24	40	–	50	–	60	ns	4.5	Fig.8
t_{PHL}	propagation delay $\overline{MR}$ to Q_7'	–	23	40	–	50	–	60	ns	4.5	Fig.10
t_{PZH}/ t_{PZL}	3-state output enable time $\overline{OE}$ to Q_n	–	21	35	–	44	–	53	ns	4.5	Fig.11
t_{PHZ}/ t_{PLZ}	3-state output disable time $\overline{OE}$ to Q_n	–	18	30	–	38	–	45	ns	4.5	Fig.11
t_W	shift clock pulse width HIGH or LOW	16	6	–	20	–	24	–	ns	4.5	Fig.7
t_W	storage clock pulse width HIGH or LOW	16	5	–	20	–	24	–	ns	4.5	Fig.8
t_W	master reset pulse width LOW	20	8	–	25	–	30	–	ns	4.5	Fig.10
t_{su}	set-up time D_S to SH_{SP}	16	5	–	20	–	24	–	ns	4.5	Fig.9
t_{su}	set-up time SH_{CP} to ST_{CP}	16	8	–	20	–	24	–	ns	4.5	Fig.8
t_h	hold time D_S to SH_{CP}	3	−2	–	3	–	3	–	ns	4.5	Fig.9
t_{rem}	removal time $\overline{MR}$ to SH_{CP}	10	−7	–	13	–	15	–	ns	4.5	Fig.10
f_{max}	maximum clock pulse frequency SH_{CP} or ST_{CP}	30	52	–	24	–	20	–	MHz	4.5	Figs 7 and 8

电查网（IC5.CN）—百万电子工程师爱用电查网

AC WAVEFORMS

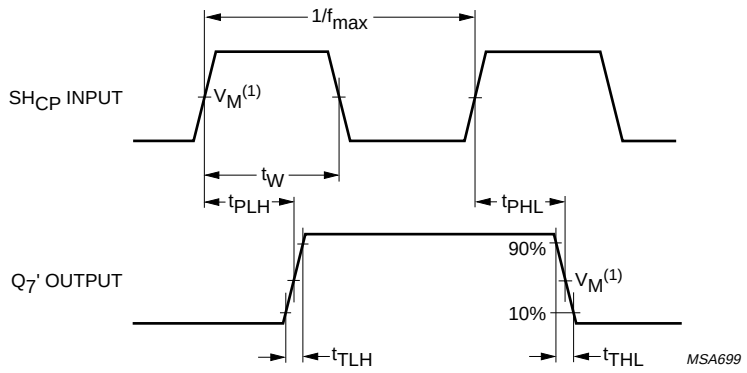

(1) HC: V_M = 50%; V_I = GND to V_{CC}
HCT: V_M = 1.3 V; V_I = GND to 3 V.

Fig.7 Waveforms showing the clock (SH_{CP}) to output (Q_7') propagation delays, the shift clock pulse width and maximum shift clock frequency.

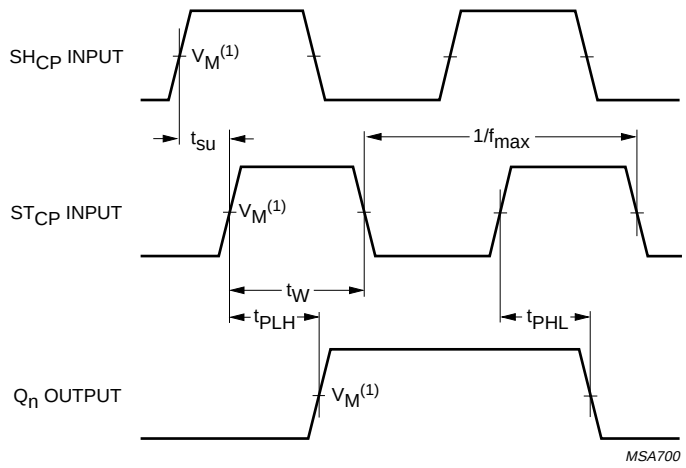

(1) HC: V_M = 50%; V_I = GND to V_{CC}
HCT: V_M = 1.3 V; V_I = GND to 3 V.

Fig.8 Waveforms showing the storage clock (ST_{CP}) to output (Q_n) propagation delays, the storage clock pulse width and the shift clock to storage clock set-up time.

电查网（IC5.CN）—百万电子工程师爱用电查网

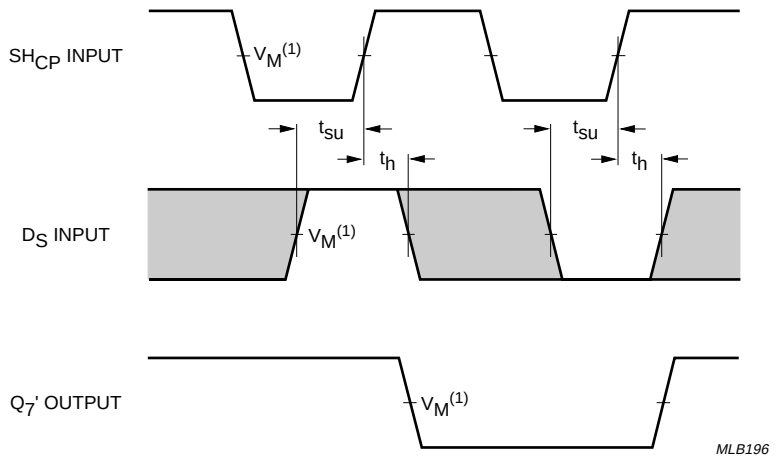

(1) HC: V_M = 50%; V_I = GND to V_{CC}
HCT: V_M = 1.3 V; V_I = GND to 3 V.

Fig.9 Waveforms showing the data set-up and hold times for the D_S input.

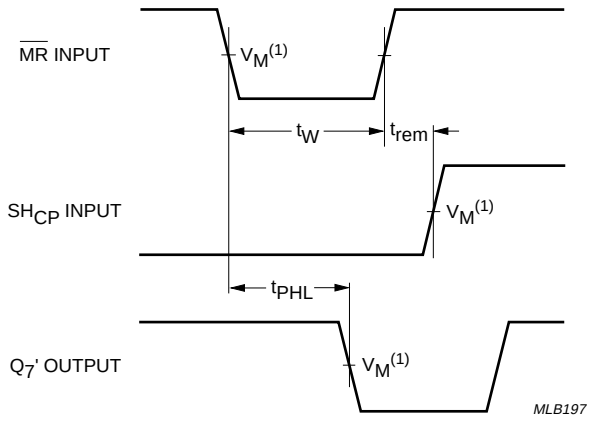

(1) HC: V_M = 50%; V_I = GND to V_{CC}
HCT: V_M = 1.3 V; V_I = GND to 3 V.

Fig.10 Waveforms showing the master reset ($\overline{MR}$) pulse width, the master reset to output (Q_7') propagation delay and the master reset to shift clock (SH_{CP}) removal time.

电查网（IC5.CN）—百万电子工程师爱用电查网

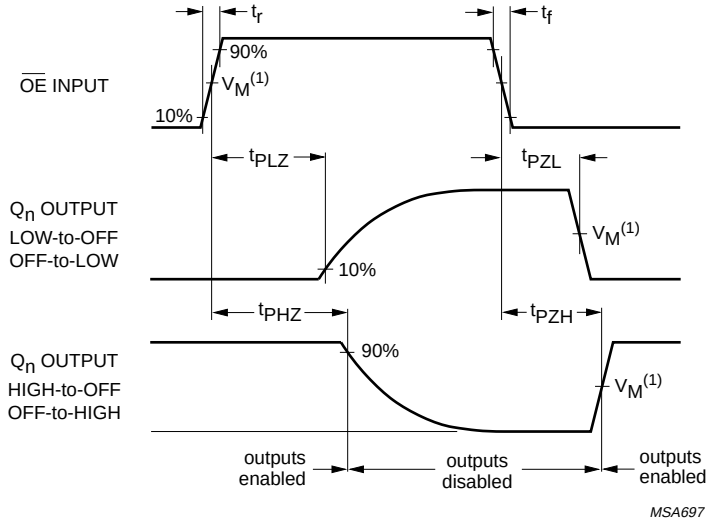

(1) HC: V_M = 50%; V_I = GND to V_{CC}
HCT: V_M = 1.3 V; V_I = GND to 3 V.

Fig.11 Waveforms showing the 3-state enable and disable times for input $\overline{OE}$.

电查网（IC5.CN）—百万电子工程师爱用电查网

PACKAGE OUTLINES

DIP16: plastic dual in-line package; 16 leads (300 mil); long body **SOT38-1**

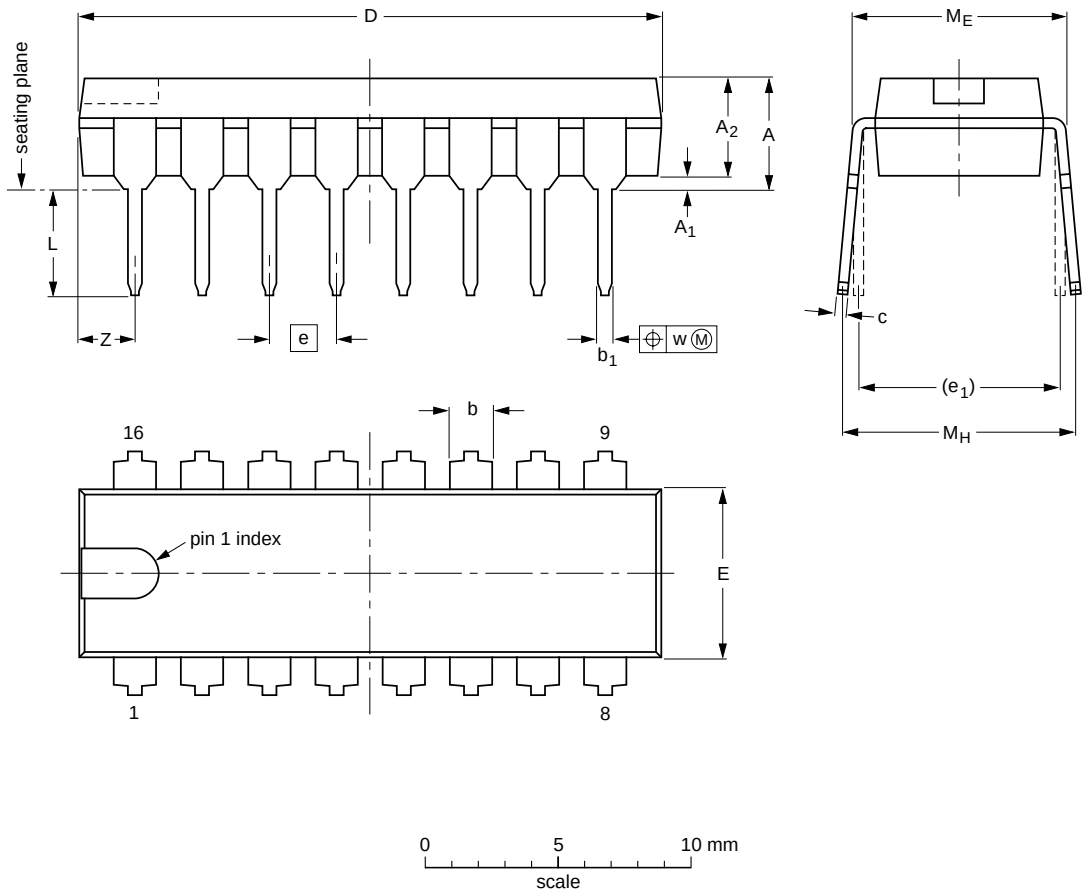

DIMENSIONS (inch dimensions are derived from the original mm dimensions)

UNIT	A max.	A_1 min.	A_2 max.	b	b_1	c	D (1)	E (1)	e	e_1	L	M_E	M_H	w	Z (1) max.
mm	4.7	0.51	3.7	1.40 1.14	0.53 0.38	0.32 0.23	21.8 21.4	6.48 6.20	2.54	7.62	3.9 3.4	8.25 7.80	9.5 8.3	0.254	2.2
inches	0.19	0.020	0.15	0.055 0.045	0.021 0.015	0.013 0.009	0.86 0.84	0.26 0.24	0.10	0.30	0.15 0.13	0.32 0.31	0.37 0.33	0.01	0.087

Note

1. Plastic or metal protrusions of 0.25 mm maximum per side are not included.

OUTLINE VERSION	REFERENCES				EUROPEAN PROJECTION	ISSUE DATE
	IEC	JEDEC	EIAJ			
SOT38-1	050G09	MO-001AE				~~92-10-02~~ 95-01-19

电查网（IC5.CN）—百万电子工程师爱用电查网

SO16: plastic small outline package; 16 leads; body width 3.9 mm **SOT109-1**

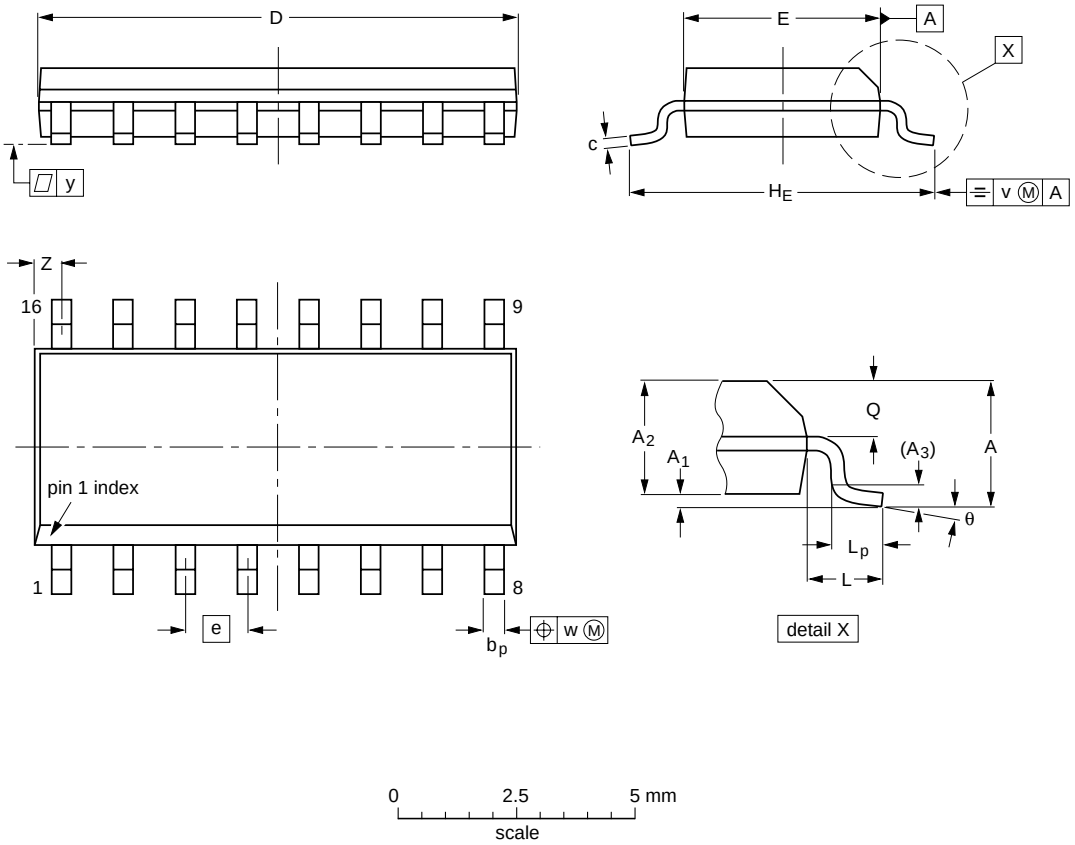

DIMENSIONS (inch dimensions are derived from the original mm dimensions)

UNIT	A max.	A_1	A_2	A_3	b_p	c	D (1)	E (1)	e	H_E	L	L_p	Q	v	w	y	Z (1)	θ
mm	1.75	0.25 0.10	1.45 1.25	0.25	0.49 0.36	0.25 0.19	10.0 9.8	4.0 3.8	1.27	6.2 5.8	1.05	1.0 0.4	0.7 0.6	0.25	0.25	0.1	0.7 0.3	8° 0°
inches	0.069	0.010 0.004	0.057 0.049	0.01	0.019 0.014	0.0100 0.0075	0.39 0.38	0.16 0.15	0.050	0.244 0.228	0.041	0.039 0.016	0.028 0.020	0.01	0.01	0.004	0.028 0.012	

Note

1. Plastic or metal protrusions of 0.15 mm maximum per side are not included.

OUTLINE VERSION	REFERENCES				EUROPEAN PROJECTION	ISSUE DATE
	IEC	JEDEC	EIAJ			
SOT109-1	076E07S	MS-012AC				~~95-01-23~~ 97-05-22

电查网（IC5.CN）—百万电子工程师爱用电查网

SSOP16: plastic shrink small outline package; 16 leads; body width 5.3 mm **SOT338-1**

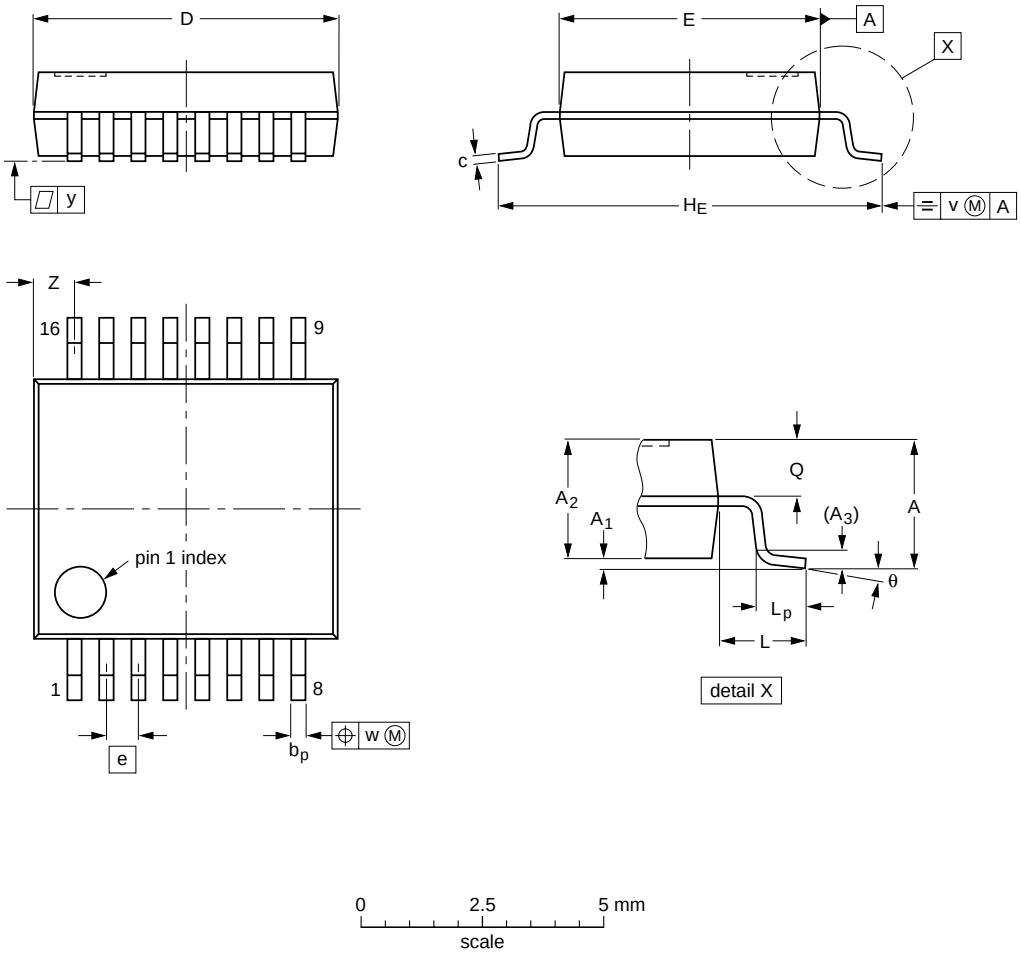

DIMENSIONS (mm are the original dimensions)

UNIT	A max.	A_1	A_2	A_3	b_p	c	D (1)	E (1)	e	H_E	L	L_p	Q	v	w	y	Z (1)	θ
mm	2.0	0.21 0.05	1.80 1.65	0.25	0.38 0.25	0.20 0.09	6.4 6.0	5.4 5.2	0.65	7.9 7.6	1.25	1.03 0.63	0.9 0.7	0.2	0.13	0.1	1.00 0.55	8° 0°

Note

1. Plastic or metal protrusions of 0.25 mm maximum per side are not included.

OUTLINE VERSION	REFERENCES				EUROPEAN PROJECTION	ISSUE DATE
	IEC	JEDEC	EIAJ			
SOT338-1		MO-150AC				~~94-01-14~~ 95-02-04

电查网（IC5.CN）—百万电子工程师爱用电查网

TSSOP16: plastic thin shrink small outline package; 16 leads; body width 4.4 mm **SOT403-1**

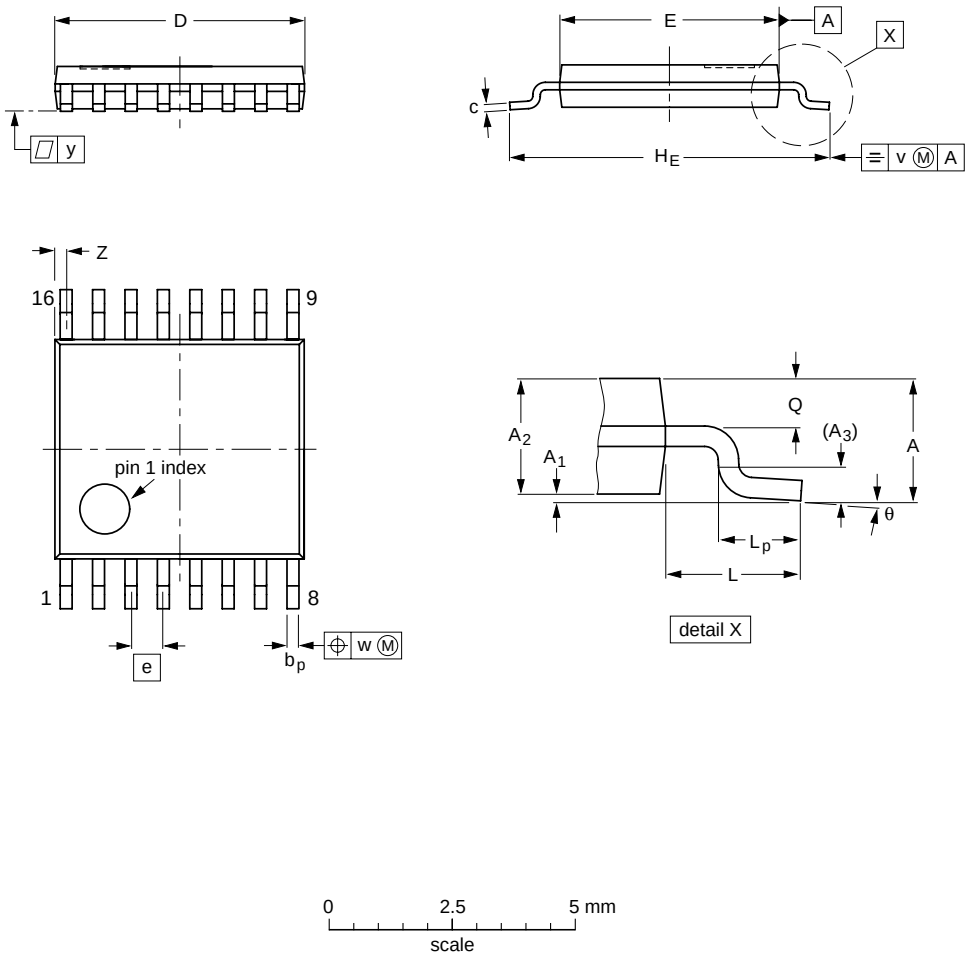

DIMENSIONS (mm are the original dimensions)

UNIT	A max.	A_1	A_2	A_3	b_p	c	D (1)	E (2)	e	H_E	L	L_p	Q	v	w	y	Z (1)	θ
mm	1.10	0.15 0.05	0.95 0.80	0.25	0.30 0.19	0.2 0.1	5.1 4.9	4.5 4.3	0.65	6.6 6.2	1.0	0.75 0.50	0.4 0.3	0.2	0.13	0.1	0.40 0.06	8° 0°

Notes

1. Plastic or metal protrusions of 0.15 mm maximum per side are not included.
2. Plastic interlead protrusions of 0.25 mm maximum per side are not included.

OUTLINE VERSION	REFERENCES				EUROPEAN PROJECTION	ISSUE DATE
	IEC	JEDEC	EIAJ			
SOT403-1		MO-153				~~94-07-12~~ 95-04-04

电查网（IC5.CN）—百万电子工程师爱用电查网

SOLDERING

Introduction

There is no soldering method that is ideal for all IC packages. Wave soldering is often preferred when through-hole and surface mounted components are mixed on one printed-circuit board. However, wave soldering is not always suitable for surface mounted ICs, or for printed-circuits with high population densities. In these situations reflow soldering is often used.

This text gives a very brief insight to a complex technology. A more in-depth account of soldering ICs can be found in our *"Data Handbook IC26; Integrated Circuit Packages"* (order code 9398 652 90011).

DIP

Soldering by dipping or by wave

The maximum permissible temperature of the solder is 260 °C; solder at this temperature must not be in contact with the joint for more than 5 seconds. The total contact time of successive solder waves must not exceed 5 seconds.

The device may be mounted up to the seating plane, but the temperature of the plastic body must not exceed the specified maximum storage temperature ($T_{stg\ max}$). If the printed-circuit board has been pre-heated, forced cooling may be necessary immediately after soldering to keep the temperature within the permissible limit.

Repairing soldered joints

Apply a low voltage soldering iron (less than 24 V) to the lead(s) of the package, below the seating plane or not more than 2 mm above it. If the temperature of the soldering iron bit is less than 300 °C it may remain in contact for up to 10 seconds. If the bit temperature is between 300 and 400 °C, contact may be up to 5 seconds.

SO, SSOP and TSSOP

Reflow soldering

Reflow soldering techniques are suitable for all SO, SSOP and TSSOP packages.

Reflow soldering requires solder paste (a suspension of fine solder particles, flux and binding agent) to be applied to the printed-circuit board by screen printing, stencilling or pressure-syringe dispensing before package placement.

Several techniques exist for reflowing; for example, thermal conduction by heated belt. Dwell times vary between 50 and 300 seconds depending on heating method.

Typical reflow temperatures range from 215 to 250 °C. Preheating is necessary to dry the paste and evaporate the binding agent. Preheating duration: 45 minutes at 45 °C.

Wave soldering

Wave soldering can be used for all SO packages. Wave soldering is **not** recommended for SSOP and TSSOP packages, because of the likelihood of solder bridging due to closely-spaced leads and the possibility of incomplete solder penetration in multi-lead devices.

If wave soldering is used - **and cannot be avoided for SSOP and TSSOP packages** - the following conditions must be observed:

- A double-wave (a turbulent wave with high upward pressure followed by a smooth laminar wave) soldering technique should be used.
- The longitudinal axis of the package footprint must be parallel to the solder flow and must incorporate solder thieves at the downstream end.

电查网（IC5.CN）—百万电子工程师爱用电查网

Even with these conditions:

- **Only consider wave soldering SSOP packages that have a body width of 4.4 mm, that is SSOP16 (SOT369-1) or SSOP20 (SOT266-1).**
- **Do not consider wave soldering TSSOP packages with 48 leads or more, that is TSSOP48 (SOT362-1) and TSSOP56 (SOT364-1).**

During placement and before soldering, the package must be fixed with a droplet of adhesive. The adhesive can be applied by screen printing, pin transfer or syringe dispensing. The package can be soldered after the adhesive is cured.

Maximum permissible solder temperature is 260 °C, and maximum duration of package immersion in solder is 10 seconds, if cooled to less than 150 °C within 6 seconds. Typical dwell time is 4 seconds at 250 °C.

A mildly-activated flux will eliminate the need for removal of corrosive residues in most applications.

REPAIRING SOLDERED JOINTS

Fix the component by first soldering two diagonally-opposite end leads. Use only a low voltage soldering iron (less than 24 V) applied to the flat part of the lead. Contact time must be limited to 10 seconds at up to 300 °C. When using a dedicated tool, all other leads can be soldered in one operation within 2 to 5 seconds between 270 and 320 °C.

DEFINITIONS

Data sheet status	
Objective specification	This data sheet contains target or goal specifications for product development.
Preliminary specification	This data sheet contains preliminary data; supplementary data may be published later.
Product specification	This data sheet contains final product specifications.
Limiting values	
Limiting values given are in accordance with the Absolute Maximum Rating System (IEC 134). Stress above one or more of the limiting values may cause permanent damage to the device. These are stress ratings only and operation of the device at these or at any other conditions above those given in the Characteristics sections of the specification is not implied. Exposure to limiting values for extended periods may affect device reliability.	
Application information	
Where application information is given, it is advisory and does not form part of the specification.	

LIFE SUPPORT APPLICATIONS

These products are not designed for use in life support appliances, devices, or systems where malfunction of these products can reasonably be expected to result in personal injury. Philips customers using or selling these products for use in such applications do so at their own risk and agree to fully indemnify Philips for any damages resulting from such improper use or sale.

电查网 www.ic5.cn

地球上最全的电子元器件资料查询网站，1500多万种型号，
与主流厂商同步更新。没错，这就是电查网！！！