电查网（IC5.CN）— 百万电子工程师专用电查网

- **Optimized for Off-Line and dc-to-dc Converters**
- **Low Start-Up Current (<1 mA)**
- **Automatic Feed-Forward Compensation**
- **Pulse-by-Pulse Current Limiting**
- **Enhanced Load-Response Characteristics**
- **Undervoltage Lockout With Hysteresis**
- **Double-Pulse Suppression**
- **High-Current Totem-Pole Output**
- **Internally Trimmed Bandgap Reference**
- **500-kHz Operation**
- **Error Amplifier With Low Output Resistance**
- **Designed to Be Interchangeable With UC2842 and UC3842 Series**

D PACKAGE
(TOP VIEW)

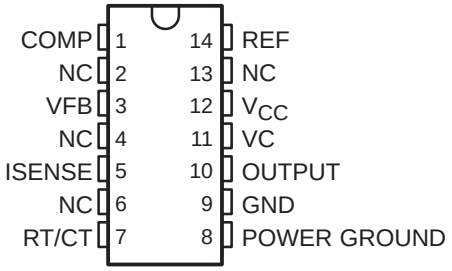

NC – No internal connection

D-8 OR P PACKAGE
(TOP VIEW)

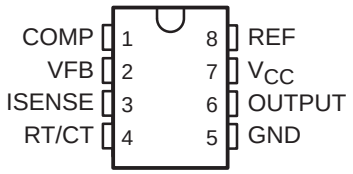

description

The TL284x and TL384x series of control integrated circuits provide the features that are necessary to implement off-line or dc-to-dc fixed-frequency current-mode control schemes with a minimum number of external components. Some of the internally implemented circuits are an undervoltage lockout (UVLO), featuring a start-up current of less than 1 mA, and a precision reference trimmed for accuracy at the error amplifier input. Other internal circuits include logic to ensure latched operation, a pulse-width modulation (PWM) comparator (which also provides current-limit control), and a totem-pole output stage designed to source or sink high-peak current. The output stage, suitable for driving N-channel MOSFETs, is low when it is in the off state.

Major differences between members of these series are the UVLO thresholds and maximum duty-cycle ranges. Typical UVLO thresholds of 16 V (on) and 10 V (off) on the TLx842 and TLx844 devices make them ideally suited to off-line applications. The corresponding typical thresholds for the TLx843 and TLx845 devices are 8.4 V (on) and 7.6 V (off). The TLx842 and TLx843 devices can operate to duty cycles approaching 100%. A duty-cycle range of 0 to 50% is obtained by the TLx844 and TLx845 by the addition of an internal toggle flip-flop, which blanks the output off every other clock cycle.

The TL284x-series devices are characterized for operation from –40°C to 85°C. The TL384x-series devices are characterized for operation from 0°C to 70°C.

Please be aware that an important notice concerning availability, standard warranty, and use in critical applications of Texas Instruments semiconductor products and disclaimers thereto appears at the end of this data sheet.

PRODUCTION DATA information is current as of publication date. Products conform to specifications per the terms of Texas Instruments standard warranty. Production processing does not necessarily include testing of all parameters.

Copyright © 1999, Texas Instruments Incorporated

电查网（IC5.CN）— 百万电子工程师爱用电查网

SLVS038E – JANUARY 1989 – REVISED DECEMBER 1999

AVAILABLE OPTIONS

T_A	PACKAGED DEVICES			CHIP FORM (Y)
	SMALL OUTLINE (D)	SMALL OUTLINE (D-8)	PLASTIC DIP (P)	
0°C to 70°C	TL3842D TL3843D TL3844D TL3845D	TL3842D-8 TL3843D-8 TL3844D-8 TL3845D-8	TL3842P TL3843P TL3844P TL3845P	TL3842Y TL3843Y TL3844Y TL3845Y
–40°C to 85°C	TL2842D TL2843D TL2844D TL2845D	TL2842D-8 TL2843D-8 TL2844D-8 TL2845D-8	TL2842P TL2843P TL2844P TL2845P	– – – –

The D and D-8 packages are available taped and reeled. Add the suffix R to the device type (i.e., TL3842DR or TL3842DR-8). Chip forms are tested at 25°C.

functional block diagram

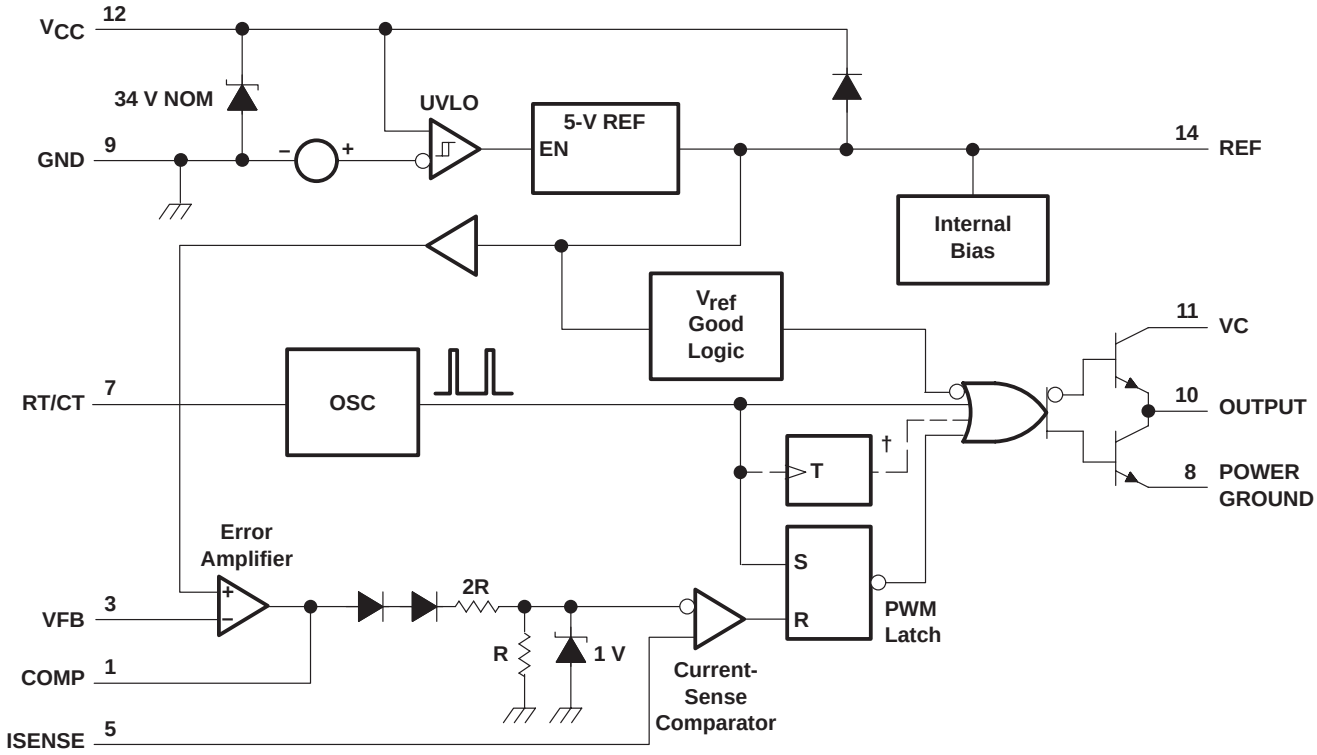

† The toggle flip-flop is present only in TL2844, TL2845, TL3844, and TL3845.
Pin numbers shown are for the D Package.

电查网（IC5.CN）— 百万电子工程师爱用电查网

absolute maximum ratings over operating free-air temperature range (unless otherwise noted)†

Supply voltage (see Note 1) (I_{CC} < 30 mA) . . . . . Self limiting
Analog input voltage range, V_I (VFB and ISENSE) . . . . . –0.3 V to 6.3 V
Output voltage, V_O (OUTPUT) . . . . . 35 V
Input voltage, V_I, (VC, D package only) . . . . . 35 V
Supply current, I_{CC} . . . . . 30 mA
Output current, I_O . . . . . ±1 A
Error amplifier output sink current . . . . . 10 mA
Package thermal impedance, θ_{JA} (see Notes 2 and 3): D package . . . . . 86°C/W
D-8 package . . . . . 97°C/W
P package . . . . . 85°C/W
Virtual junction temperature range, T_J . . . . . 0°C to 150°C
Output energy (capacitive load) . . . . . 5 µJ
Lead temperature, 1,6 mm (1/16 inch) from case for 10 seconds . . . . . 260°C
Storage temperature range, T_{stg} . . . . . –65°C to 150°C

† Stresses beyond those listed under “absolute maximum ratings” may cause permanent damage to the device. These are stress ratings only, and functional operation of the device at these or any other conditions beyond those indicated under “recommended operating conditions” is not implied. Exposure to absolute-maximum-rated conditions for extended periods may affect device reliability.

NOTES: 1. All voltages are with respect to the device GND terminal.
2. Maximum power dissipation is a function of T_J(max), θ_{JA}, and T_A. The maximum allowable power dissipation at any allowable ambient temperature is $P_D = (T_J(max) – T_A)/\theta_{JA}$. Operating at the absolute maximum T_J of 150°C can impact reliability.
3. The package thermal impedance is calculated in accordance with JESD 51.

recommended operating conditions

		MIN	NOM	MAX	UNIT
Supply voltage, V_{CC} and VC‡				30	V
Input voltage, V_I, RT/CT		0		5.5	V
Input voltage, V_I, VFB and ISENSE		0		5.5	V
Output voltage, V_O, OUTPUT		0		30	V
Output voltage, V_O, POWER GROUND‡		–0.1		1	V
Supply current, externally limited, I_{CC}				25	mA
Average output current, I_O				200	mA
Reference output current, $I_{O(ref)}$				–20	mA
Oscillator frequency, f_{osc}			100	500	kHz
Operating virtual junction temperature, T_J		0		125	°C
Operating free-air temperature, T_A	TL284x	–40		85	°C
	TL384x	0		70	

‡ These recommended voltages for V_C and POWER GROUND apply only to the D package.

电查网（IC5.CN）— 百万电子工程师爱用电查网

SLVS038E – JANUARY 1989 – REVISED DECEMBER 1999

electrical characteristics over recommended operating free-air temperature range, V_{CC} = 15 V (see Note 4), R_T = 10 kΩ, C_T = 3.3 nF (unless otherwise specified)

reference section

PARAMETER	TEST CONDITIONS	TL284x			TL384x			UNIT
		MIN	TYP†	MAX	MIN	TYP†	MAX	
Output voltage	I_O = 1 mA, T_A = 25°C	4.95	5	5.05	4.9	5	5.1	V
Line regulation	V_{CC} = 12 V to 25 V		6	20		6	20	mV
Load regulation	I_O = 1 mA to 20 mA		6	25		6	25	mV
Temperature coefficient of output voltage			0.2	0.4		0.2	0.4	mV/°C
Output voltage with worst-case variation	V_{CC} = 12 V to 25 V, I_O = 1 mA to 20 mA	4.9		5.1	4.82		5.18	V
Output noise voltage	f = 10 Hz to 10 kHz, T_A = 25°C		50			50		µV
Output-voltage long-term drift	After 1000 h at T_A = 25°C		5	25		5	25	mV
Short-circuit output current		–30	–100	–180	–30	–100	–180	mA

† All typical values are at T_A = 25°C.
NOTE 4: Adjust V_{CC} above the start threshold before setting it to 15 V.

oscillator section

PARAMETER	TEST CONDITIONS	TL284x			TL384x			UNIT
		MIN	TYP†	MAX	MIN	TYP†	MAX	
Oscillator frequency (see Note 5)	T_A = 25°C	47	52	57	47	52	57	kHz
Frequency change with supply voltage	V_{CC} = 12 V to 25 V		2	10		2	10	Hz/kHz
Frequency change with temperature			50			50		Hz/kHz
Peak-to-peak amplitude at RT/CT			1.7			1.7		V

† All typical values are at T_A = 25°C.
NOTES: 4. Adjust V_{CC} above the start threshold before setting it to 15 V.
5. Output frequency equals oscillator frequency for the TLx842 and TLx843. Output frequency is one-half oscillator frequency for the TLx844 and TLx845.

error-amplifier section

PARAMETER	TEST CONDITIONS	TL284x			TL384x			UNIT
		MIN	TYP†	MAX	MIN	TYP†	MAX	
Feedback input voltage	COMP at 2.5 V	2.45	2.50	2.55	2.42	2.50	2.58	V
Input bias current			–0.3	–1		–0.3	–2	µA
Open-loop voltage amplification	V_O = 2 V to 4 V	65	90		65	90		dB
Gain-bandwidth product		0.7	1		0.7	1		MHz
Supply-voltage rejection ratio	V_{CC} = 12 V to 25 V	60	70		60	70		dB
Output sink current	VFB at 2.7 V, COMP at 1.1 V	2	6		2	6		mA
Output source current	VFB at 2.3 V, COMP at 5 V	–0.5	–0.8		–0.5	–0.8		mA
High-level output voltage	VFB at 2.3 V, R_L = 15 kΩ to GND	5	6		5	6		V
Low-level output voltage	VFB at 2.7 V, R_L = 15 kΩ to GND		0.7	1.1		0.7	1.1	V

† All typical values are at T_A = 25°C.
NOTE 4: Adjust V_{CC} above the start threshold before setting it to 15 V.

电查网（IC5.CN）— 百万电子工程师采用电查网

electrical characteristics over recommended operating free-air temperature range, V_{CC} = 15 V (see Note 4), R_T = 10 kΩ, C_T = 3.3 nF (unless otherwise specified) (continued)

current-sense section

PARAMETER	TEST CONDITIONS		TL284x			TL384x			UNIT
			MIN	TYP†	MAX	MIN	TYP†	MAX	
Voltage amplification	See Notes 6 and 7		2.85	3	3.13	2.85	3	3.15	V/V
Current-sense comparator threshold	COMP at 5 V,	See Note 6	0.9	1	1.1	0.9	1	1.1	V
Supply-voltage rejection ratio	V_{CC} = 12 V to 25 V,	See Note 6		70			70		dB
Input bias current				–2	–10		–2	–10	µA
Delay time to output				150	300		150	300	ns

† All typical values are at T_A = 25°C.

NOTES: 4. Adjust V_{CC} above the start threshold before setting it to 15 V.
6. These parameters are measured at the trip point of the latch, with VFB at 0 V.
7. Voltage amplification is measured between ISENSE and COMP, with the input changing from 0 V to 0.8 V.

output section

PARAMETER	TEST CONDITIONS		TL284x			TL384x			UNIT
			MIN	TYP†	MAX	MIN	TYP†	MAX	
High-level output voltage	I_{OH} = –20 mA		13	13.5		13	13.5		V
	I_{OH} = –200 mA		12	13.5		12	13.5		
Low-level output voltage	I_{OL} = 20 mA			0.1	0.4		0.1	0.4	V
	I_{OL} = 200 mA			1.5	2.2		1.5	2.2	
Rise time	C_L = 1 nF,	T_A = 25°C		50	150		50	150	ns
Fall time	C_L = 1 nF,	T_A = 25°C		50	150		50	150	ns

† All typical values are at T_A = 25°C.

NOTE 4: Adjust V_{CC} above the start threshold before setting it to 15 V.

undervoltage-lockout section

PARAMETER		TL284x			TL384x			UNIT
		MIN	TYP†	MAX	MIN	TYP†	MAX	
Start threshold voltage	TLx842, TLx844	15	16	17	14.5	16	17.5	V
	TLx843, TLx845	7.8	8.4	9	7.8	8.4	9	
Minimum operating voltage after startup	TLx842, TLx844	9	10	11	8.5	10	11.5	V
	TLx843, TLx845	7	7.6	8.2	7	7.6	8.2	

† All typical values are at T_A = 25°C.

NOTE 4: Adjust V_{CC} above the start threshold before setting it to 15 V.

pulse-width-modulator section

PARAMETER		TL284x			TL384x			UNIT
		MIN	TYP†	MAX	MIN	TYP†	MAX	
Maximum duty cycle	TLx842, TLx843	95%	97%	100%	95%	97%	100%	
	TLx844, TLx845	46%	48%	50%	46%	48%	50%	
Minimum duty cycle				0			0	

† All typical values are at T_A = 25°C.

NOTE 4: Adjust V_{CC} above the start threshold before setting it to 15 V.

电查网（IC5.CN）— 百万电子工程师爱用电查网

SLVS038E – JANUARY 1989 – REVISED DECEMBER 1999

electrical characteristics over recommended operating free-air temperature range, V_{CC} = 15 V (see Note 4), R_T = 10 kΩ, C_T = 3.3 nF (unless otherwise specified) (continued)

supply voltage

PARAMETER	TEST CONDITIONS	TL284x			TL384x			UNIT
		MIN	TYP†	MAX	MIN	TYP†	MAX	
Start-up current			0.5	1		0.5	1	mA
Operating supply current	VFB and ISENSE at 0 V		11	17		11	17	mA
Limiting voltage	I_{CC} = 25 mA		34			34		V

† All typical values are at T_A = 25°C.
NOTE 4: Adjust V_{CC} above the start threshold before setting it to 15 V.

electrical characteristics, V_{CC} = 15 V (see Note 4), R_T = 10 kΩ, C_T = 3.3 nF, T_A = 25°C (unless otherwise specified)

reference section

PARAMETER	TEST CONDITIONS	TL384xY			UNIT
		MIN	TYP	MAX	
Output voltage	I_O = 1 mA		5		V
Line regulation	V_{CC} = 12 V to 25 V		6		mV
Load regulation	I_O = 1 mA to 20 mA		6		mV
Temperature coefficient of output voltage			0.2		mV/°C
Output noise voltage	f = 10 Hz to 10 kHz		50		µV
Output-voltage long-term drift	After 1000 h at T_A = 25°C		5		mV
Short-circuit output current			–100		mA

NOTE 4: Adjust V_{CC} above the start threshold before setting it to 15 V.

oscillator section

PARAMETER	TEST CONDITIONS	TL384xY			UNIT
		MIN	TYP	MAX	
Oscillator frequency (see Note 5)			52		kHz
Frequency change with supply voltage	V_{CC} = 12 V to 25 V		2		Hz/kHz
Frequency change with temperature			5		Hz/kHz
Peak-to-peak amplitude at RT/CT			1.7		V

NOTES: 4. Adjust V_{CC} above the start threshold before setting it to 15 V.
5. Output frequency equals oscillator frequency for the TLx842 and TLx843. Output frequency is one-half oscillator frequency for the TLx844 and TLx845.

电查网（IC5.CN）— 百万电子工程师爱用电查网

electrical characteristics, V_{CC} = 15 V (see Note 4), R_T = 10 kΩ, C_T = 3.3 nF, T_A = 25°C (unless otherwise specified) (continued)

error-amplifier section

PARAMETER	TEST CONDITIONS		TL384xY MIN	TL384xY TYP	TL384xY MAX	UNIT
Feedback input voltage	COMP at 2.5 V			2.50		V
Input bias current				–0.3		µA
Open-loop voltage amplification	V_O = 2 V to 4 V			90		dB
Gain-bandwidth product				1		MHz
Supply-voltage rejection ratio	V_{CC} = 12 V to 25 V			70		dB
Output sink current	VFB at 2.7 V,	COMP at 1.1 V		6		mA
Output source current	VFB at 2.3 V,	COMP at 5 V		–0.8		mA
High-level output voltage	VFB at 2.3 V,	R_L = 15 kΩ to GND		6		V
Low-level output voltage	VFB at 2.7 V,	R_L = 15 kΩ to GND		0.7		V

NOTE 4: Adjust V_{CC} above the start threshold before setting it to 15 V.

current-sense section

PARAMETER	TEST CONDITIONS		TL384xY MIN	TL384xY TYP	TL384xY MAX	UNIT
Voltage amplification	See Notes 6 and 7			3		V/V
Current-sense comparator threshold	COMP at 5 V,	See Note 6		1		V
Supply-voltage rejection ratio	V_{CC} = 12 V to 25 V,	See Note 6		70		dB
Input bias current				–2		µA
Delay time to output				150		ns

NOTES: 4. Adjust V_{CC} above the start threshold before setting it to 15 V.
6. These parameters are measured at the trip point of the latch, with VFB at 0 V.
7. Voltage amplification is measured between ISENSE and COMP, with the input changing from 0 V to 0.8 V.

output section

PARAMETER	TEST CONDITIONS	TL384xY MIN	TL384xY TYP	TL384xY MAX	UNIT
High-level output voltage	I_{OH} = –20 mA		13.5		V
	I_{OH} = –200 mA		13.5		
Low-level output voltage	I_{OL} = 20 mA		0.1		V
	I_{OL} = 200 mA		1.5		
Rise time	C_L = 1 nF		50		ns
Fall time	C_L = 1 nF		50		ns

NOTE 4: Adjust V_{CC} above the start threshold before setting it to 15 V.

undervoltage-lockout section

PARAMETER		TL384xY MIN	TL384xY TYP	TL384xY MAX	UNIT
Start threshold voltage	TL3842Y, TL3844Y		16		V
	TL3843Y, TL3845Y		8.4		
Minimum operating voltage after startup	TL3842Y, TL3844Y		10		V
	TL3843Y, TL3845Y		7.6		

NOTE 4: Adjust V_{CC} above the start threshold before setting it to 15 V.

电查网（IC5.CN）— 百万电子工程师爱用电查网

SLVS038E – JANUARY 1989 – REVISED DECEMBER 1999

electrical characteristics, V_{CC} = 15 V (see Note 4), R_T = 10 kΩ, C_T = 3.3 nF, T_A = 25°C (unless otherwise specified) (continued)

pulse-width-modulator section

PARAMETER		TL384xY			UNIT
		MIN	TYP	MAX	
Maximum duty cycle	TL3842Y, TL3843Y		97%		
	TL3844Y, TL3845Y		48%		

NOTE 4: Adjust V_{CC} above the start threshold before setting it to 15 V.

supply voltage

PARAMETER	TEST CONDITIONS	TL384xY			UNIT
		MIN	TYP	MAX	
Start-up current			0.5	1	mA
Operating supply current	VFB and ISENSE at 0 V		11	17	mA
Limiting voltage	I_{CC} = 25 mA		34		V

NOTE 4: Adjust V_{CC} above the start threshold before setting it to 15 V.

电查网（IC5.CN）— 百万电子工程师常用电查网

APPLICATION INFORMATION

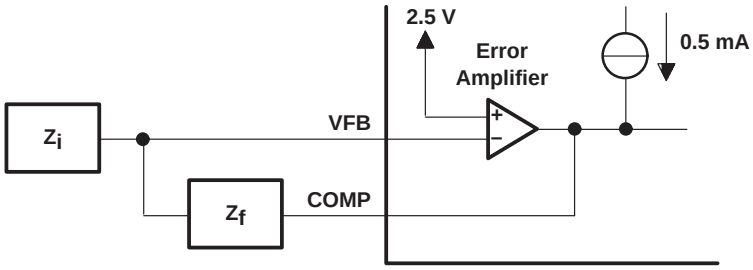

NOTE A: Error amplifier can source or sink up to 0.5 mA.

Figure 1. Error-Amplifier Configuration

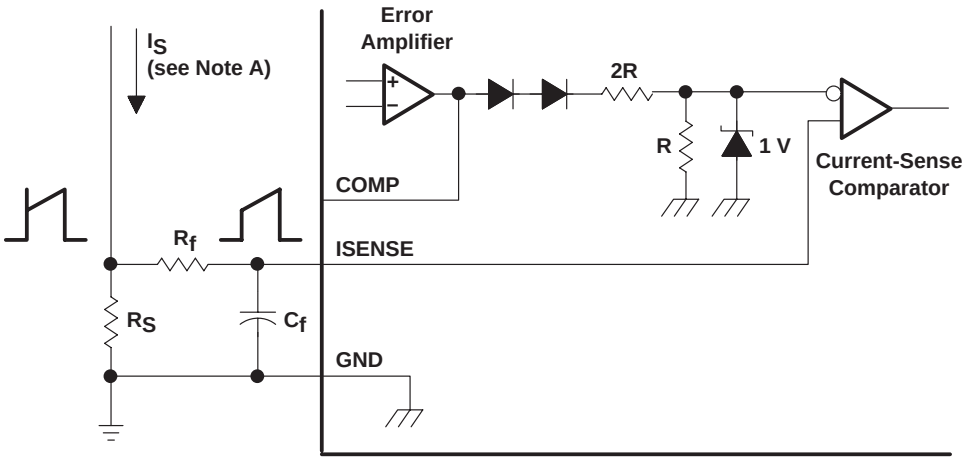

NOTE A: Peak current (I_S) is determined by the formula:

$$I_{S(max)} = \frac{1\ V}{R_S}$$

A small RC filter formed by resistor R_f and capacitor C_f may be required to suppress switch transients.

Figure 2. Current-Sense Circuit

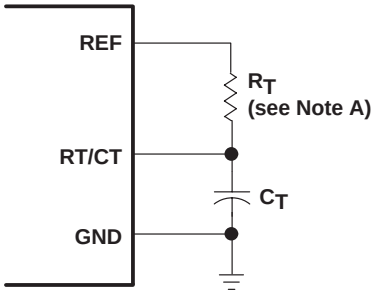

NOTE A: For $R_T > 5\ k\Omega$: $f \approx \frac{1.72}{R_T C_T}$

Figure 3. Oscillator Section

电查网（IC5.CN）— 百万电子工程师爱用电查网

SLVS038E – JANUARY 1989 – REVISED DECEMBER 1999

APPLICATION INFORMATION

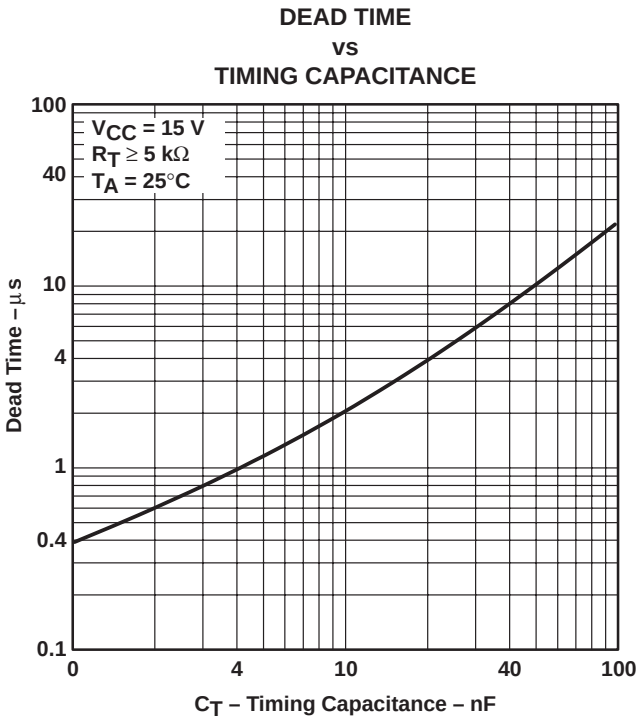

Figure 4

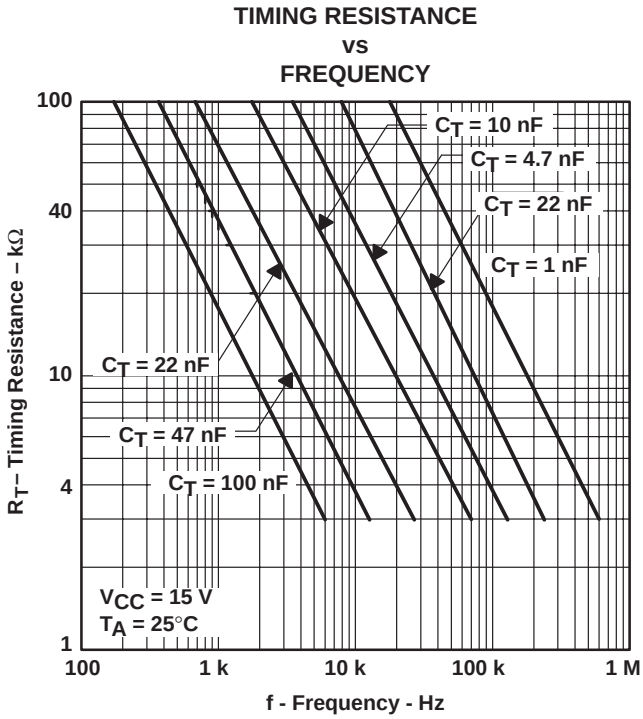

Figure 5

open-loop laboratory test fixture

In the open-loop laboratory test fixture shown in Figure 6, high peak currents associated with loads necessitate careful grounding techniques. Timing and bypass capacitors should be connected close to the GND terminal in a single-point ground. The transistor and 5-kΩ potentiometer sample the oscillator waveform and apply an adjustable ramp to the ISENSE terminal.

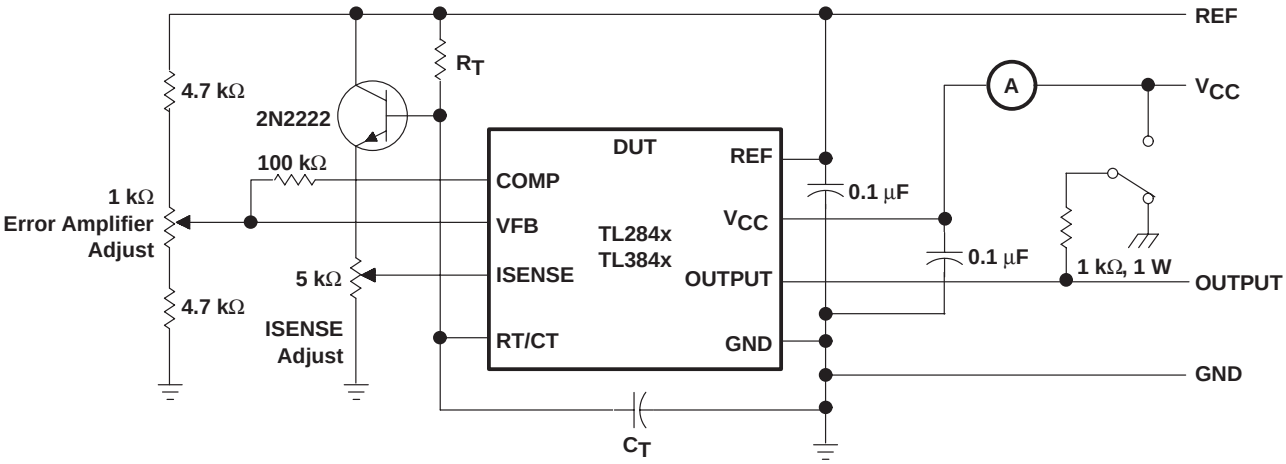

Figure 6. Open-Loop Laboratory Test Fixture

电查网（IC5.CN）— 百万电子工程师爱用电查网

APPLICATION INFORMATION

shutdown technique

The PWM controller (see Figure 7) can be shut down by two methods: either raise the voltage at ISENSE above 1 V or pull the COMP terminal below a voltage two diode drops above ground. Either method causes the output of the PWM comparator to be high (refer to block diagram). The PWM latch is reset dominant so that the output remains low until the next clock cycle after the shutdown condition at the COMP or ISENSE terminal is removed. In one example, an externally latched shutdown can be accomplished by adding an SCR that resets by cycling V_{CC} below the lower UVLO threshold. At this point, the reference turns off, allowing the SCR to reset.

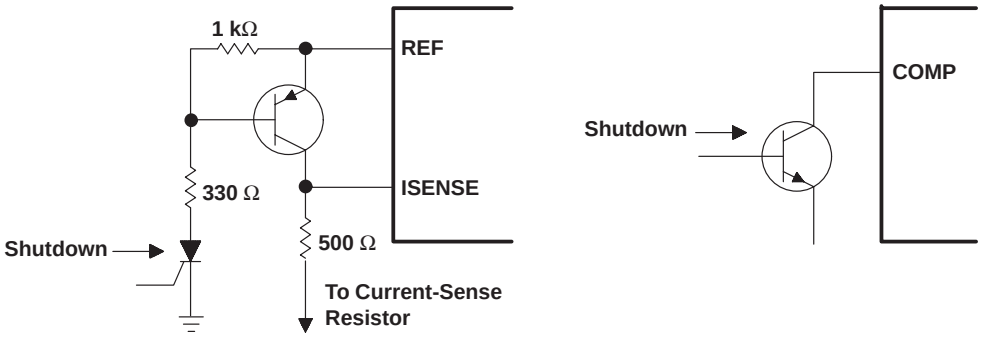

Figure 7. Shutdown Techniques

A fraction of the oscillator ramp can be resistively summed with the current-sense signal to provide slope compensation for converters requiring duty cycles over 50% (see Figure 8). Note that capacitor C forms a filter with R2 to suppress the leading-edge switch spikes.

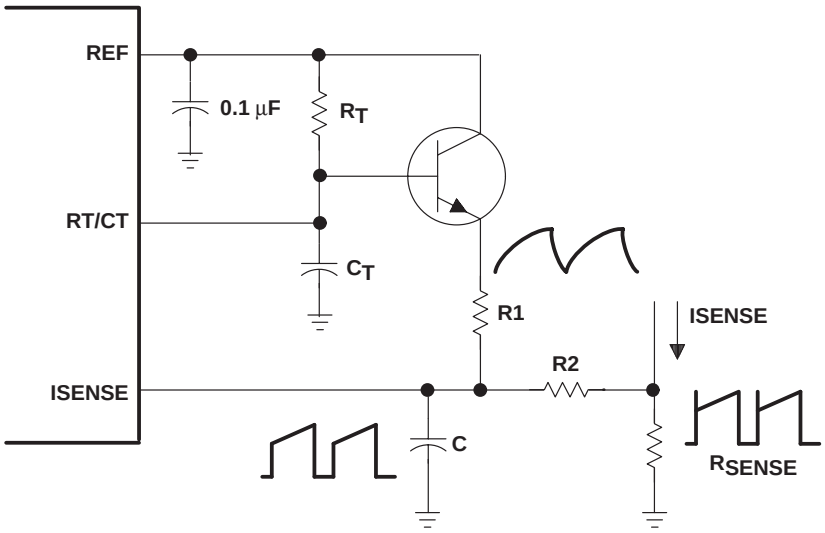

Figure 8. Slope Compensation

电查网（IC5.CN）— 百万电子工程师爱用电查网

IMPORTANT NOTICE

Texas Instruments and its subsidiaries (TI) reserve the right to make changes to their products or to discontinue any product or service without notice, and advise customers to obtain the latest version of relevant information to verify, before placing orders, that information being relied on is current and complete. All products are sold subject to the terms and conditions of sale supplied at the time of order acknowledgement, including those pertaining to warranty, patent infringement, and limitation of liability.

TI warrants performance of its semiconductor products to the specifications applicable at the time of sale in accordance with TI's standard warranty. Testing and other quality control techniques are utilized to the extent TI deems necessary to support this warranty. Specific testing of all parameters of each device is not necessarily performed, except those mandated by government requirements.

CERTAIN APPLICATIONS USING SEMICONDUCTOR PRODUCTS MAY INVOLVE POTENTIAL RISKS OF DEATH, PERSONAL INJURY, OR SEVERE PROPERTY OR ENVIRONMENTAL DAMAGE ("CRITICAL APPLICATIONS"). TI SEMICONDUCTOR PRODUCTS ARE NOT DESIGNED, AUTHORIZED, OR WARRANTED TO BE SUITABLE FOR USE IN LIFE-SUPPORT DEVICES OR SYSTEMS OR OTHER CRITICAL APPLICATIONS. INCLUSION OF TI PRODUCTS IN SUCH APPLICATIONS IS UNDERSTOOD TO BE FULLY AT THE CUSTOMER'S RISK.

In order to minimize risks associated with the customer's applications, adequate design and operating safeguards must be provided by the customer to minimize inherent or procedural hazards.

TI assumes no liability for applications assistance or customer product design. TI does not warrant or represent that any license, either express or implied, is granted under any patent right, copyright, mask work right, or other intellectual property right of TI covering or relating to any combination, machine, or process in which such semiconductor products or services might be or are used. TI's publication of information regarding any third party's products or services does not constitute TI's approval, warranty or endorsement thereof.

Copyright © 1999, Texas Instruments Incorporated

电查网 www.ic5.cn

地球上最全的电子元器件资料查询网站，1500多万种型号，
与主流厂商同步更新。没错，这就是电查网！！！