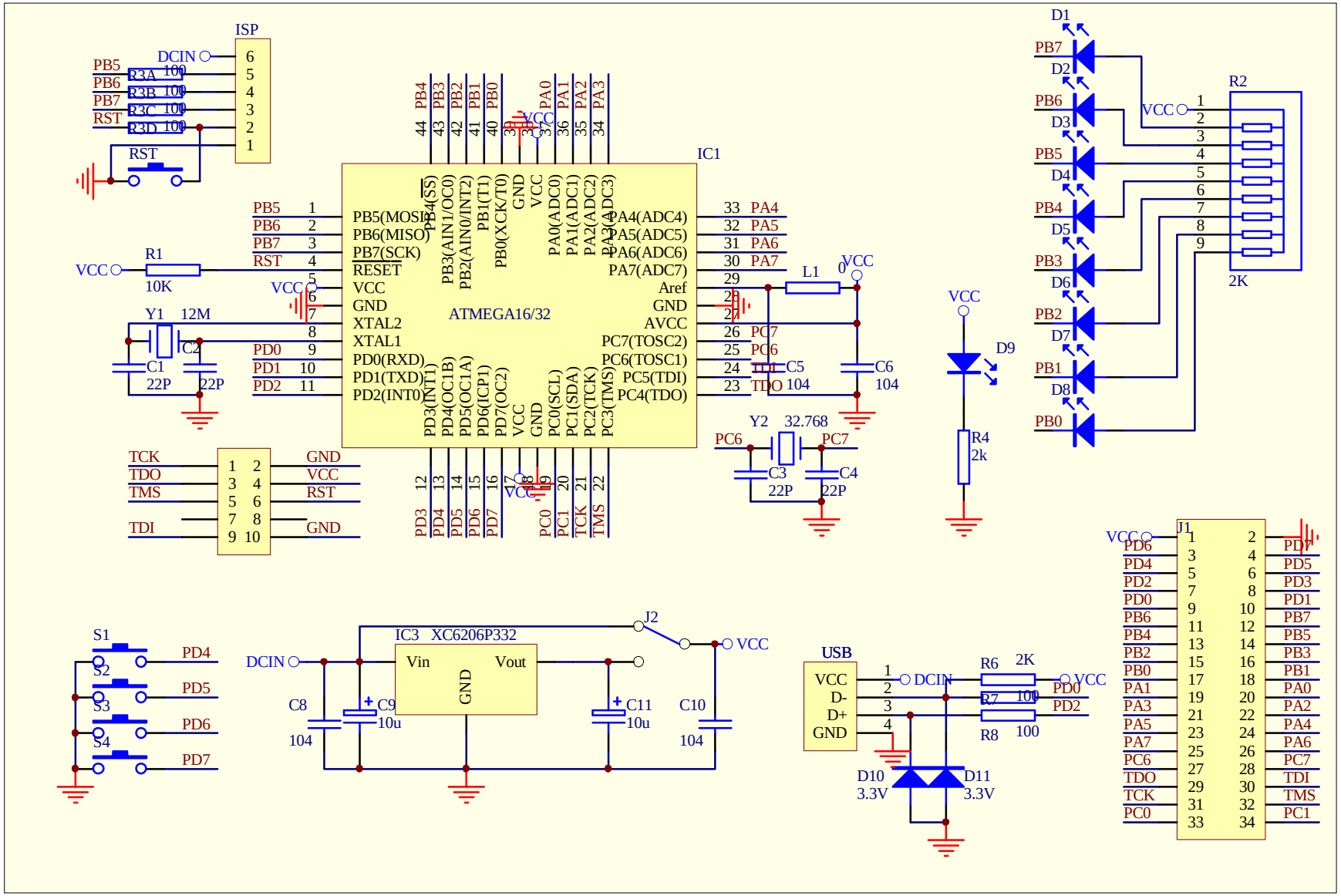
ISP
DCIN
PB5
PB6
PB7
RST
R3A 100
R3B 100
R3C 100
R3D 100
RST
IC1
ATMEGA16/32
PB5(MOSI)
PB6(MISO)
PB7(SCK)
RESET
VCC
GND
XTAL2
XTAL1
PD0(RXD)
PD1(TXD)
PD2(INT0)
PD3(INT1)
PD4(OC1B)
PD5(OC1A)
PD6(ICP1)
PD7(OC2)
PB4(SS)
PB3(AIN1/OC0)
PB2(AIN0/INT2)
PB1(T1)
PB0(XCK/T0)
PA0(ADC0)
PA1(ADC1)
PA2(ADC2)
PA3(ADC3)
PA4(ADC4)
PA5(ADC5)
PA6(ADC6)
PA7(ADC7)
Aref
AVCC
PC7(TOSC2)
PC6(TOSC1)
PC5(TDI)
PC4(TDO)
PC0(SCL)
PC1(SDA)
PC2(TCK)
PC3(TMS)
R1
10K
Y1 12M
C1 22P
C2 22P
L1 0
C5 104
C6 104
Y2 32.768
C3 22P
C4 22P
TCK
TDO
TMS
TDI
GND
VCC
RST
D1
D2
D3
D4
D5
D6
D7
D8
R2
2K
D9
R4 2k
S1
S2
S3
S4
PD4
PD5
PD6
PD7
IC3 XC6206P332
Vin
Vout
GND
C8 104
C9 10u
C11 10u
C10 104
J2
USB
VCC
D-
D+
GND
R6 2K
R7 100
R8 100
D10 3.3V
D11 3.3V
J1
PD6
PD4
PD2
PD0
PB6
PB4
PB2
PB0
PA1
PA3
PA5
PA7
PC6
TDO
TCK
PC0
PD7
PD5
PD3
PD1
PB7
PB5
PB3
PB1
PA0
PA2
PA4
PA6
PC7
TDI
TMS
PC1